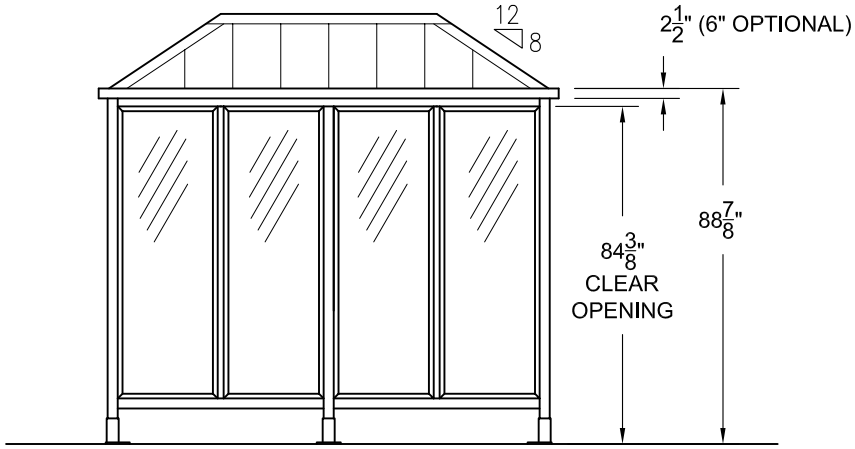

FRONT ELEVATION

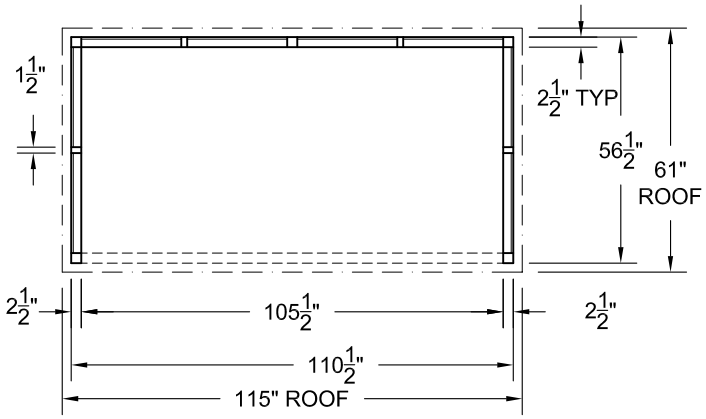

PLAN VIEW: 3-SIDED UNIT

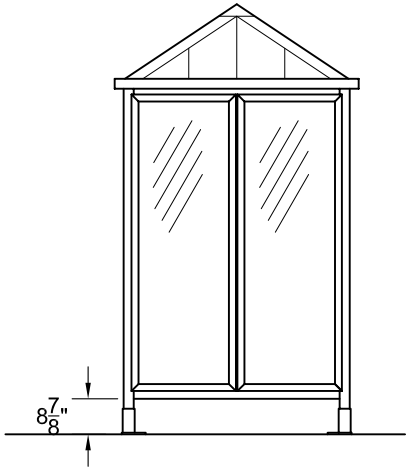

SIDE ELEVATION

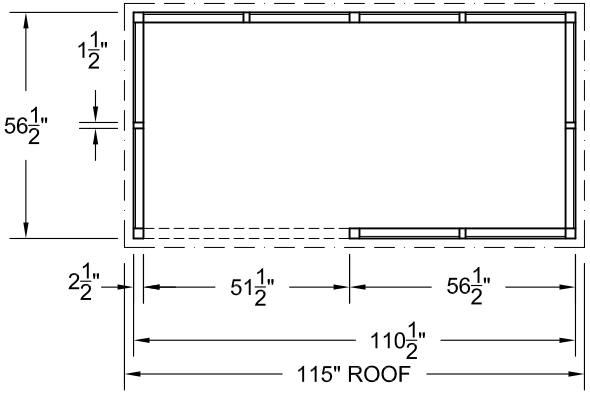

PLAN VIEW: 3 .5-SIDED UNIT

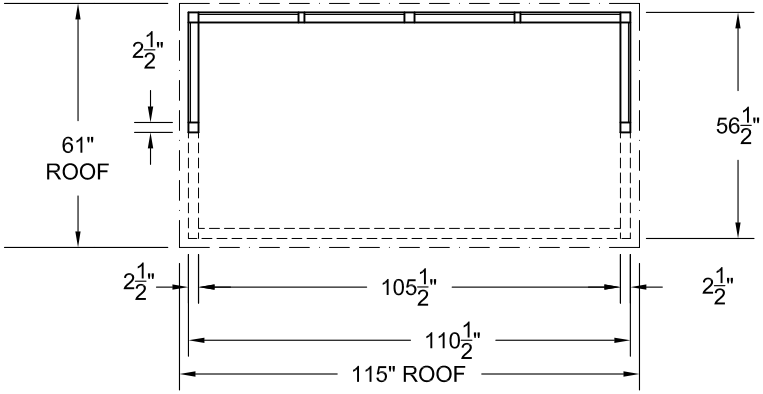

PLAN VIEW: CANTILEVERED UNIT

DUO-GARD
Tel (734) 207-9700 Fax (734) 207-7995
www.duo-gard.com

THIS DRAWING IS PROPRIETARY AND FOR THE SOLE USE OF OUR CUSTOMER AND MAY NOT BE COPIED OR REPRODUCED WITHOUT PRIOR WRITTEN CONSENT FROM DUO-GARD INDUSTRIES, INC.

LEAD TIME BEGINS UPON RECIEPT OF SIGNED SHOP DRAWINGS

APPROVAL SIGNATURE DATE

X _____ ___/___/___

PROJECT NAME

DESCRIPTION

5' X 9' / NOM. 5' X 10' SHELTER SHOWING STANDING SEAM HIP ROOF

PRJT ENG	PRJT MGR	DRW'G DATE	REV1	REV2	SCALE	PAGE	OF	DRWNG #
		5-7-09			1/4" = 1'-0"	1	1	WSSH1